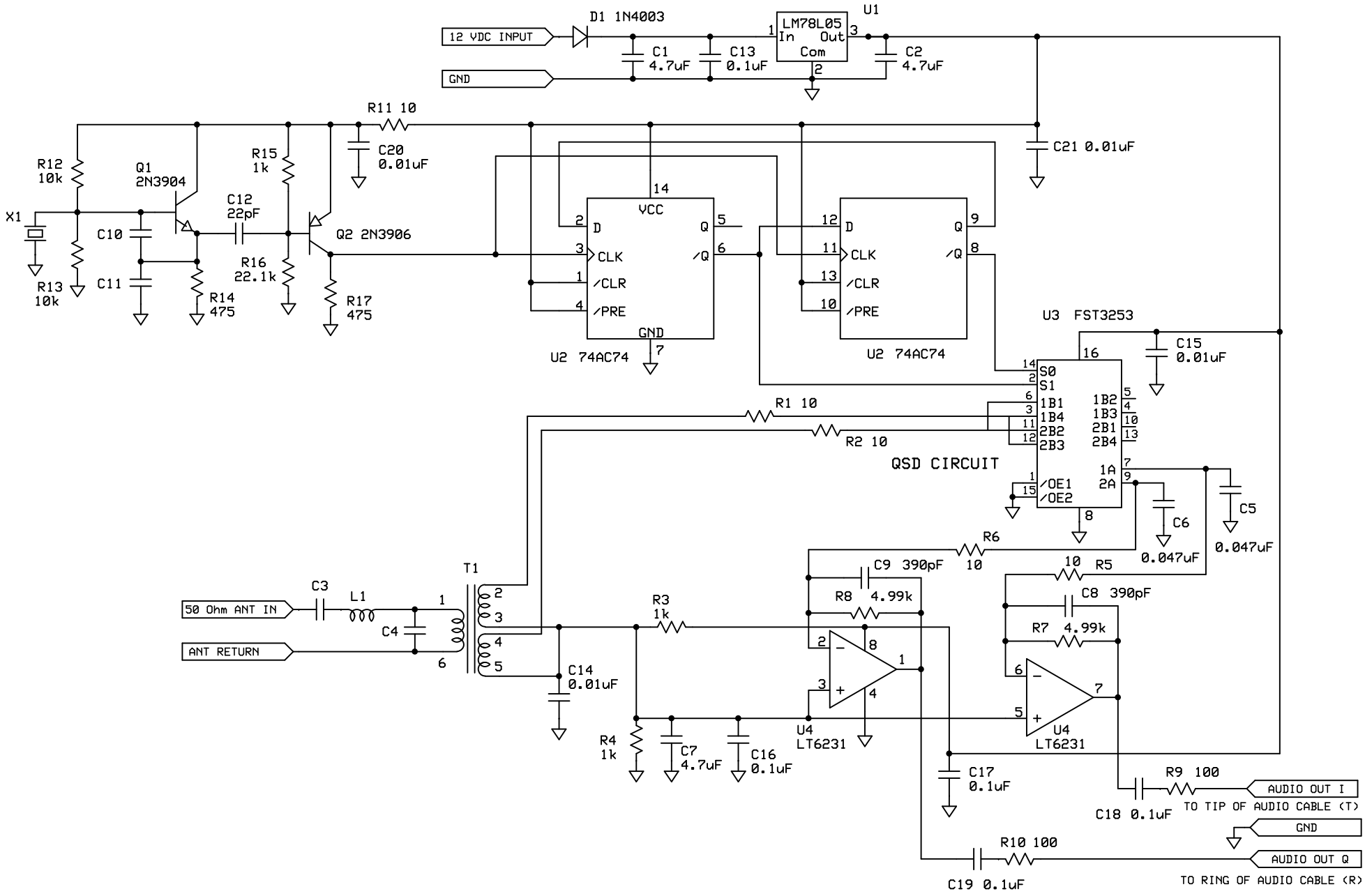

SoftRock Projects		
SoftRock IF Lite II Combined		
Tony KB9YIG	9/3/11	Page 1 of 3